Available online at www.sciencedirect.com
ScienceDirect
Plant Science 174 (2008) 467–474
PLANT SCIENCE
www.elsevier.com/locate/plantsci

Inducible antiviral activity and rapid production of the Ribosome-Inactivating Protein I from *Phytolacca heterotepala* in tobacco

Giandomenico Corrado [a], Mariarosaria Scarpetta [a], Daniela Alioto [b], Antimo Di Maro [c], Letizia Polito [d], Augusto Parente [c], Rosa Rao [a,*]

[a] *Dipartimento di Scienze del Suolo, della Pianta, dell'Ambiente e delle Produzioni Animali, Università degli Studi di Napoli "Federico II", via Università 100, 80055 Portici, Napoli, Italy*
[b] *Dipartimento di Arboricoltura, Botanica e Patologia Vegetale, Università degli Studi di Napoli "Federico II", Portici, Napoli, Italy*
[c] *Dipartimento di Scienze della Vita, Seconda Università di Napoli, Caserta, Italy*
[d] *Dipartimento di Patologia Sperimentale, Università di Bologna, Bologna, Italy*

Received 17 December 2007; received in revised form 21 December 2007; accepted 17 January 2008
Available online 29 January 2008

Abstract

We studied the *in vitro* and *in planta* antiviral activity of the PhRIP I, a type 1 Ribosome-Inactivating Protein originally purified from leaves of the *Phytolacca heterotepala*. This protein inhibited protein translation in a cell-free assay and limited the local lesion formation from PVX infection on tobacco leaves. We used a transient expression system based on leaf infiltration with recombinant Agrobacteria to show that tobacco can produce a correctly processed PhRIP I enzyme that retains its antiviral activity. Hence, it is possible to rapidly yield in plants a type 1 RIP by means of this transient expression system. To analyse the possible increase of virus resistance in plants, *Nicotiana tabacum* lines that were transformed with the *PhRIP I* coding sequence under the control of the wound-inducible PGIP promoter were challenged by PVX. A significantly lower number of viral lesions compared to untransformed plants was observed only after the induction of the transgene, indicating that the controlled gene expression of an antiviral protein can increase virus resistance.

Keywords: RIP; Virus; Resistance; Inducible; Transient expression; Transgenic

1. Introduction

Ribosome-Inactivating Proteins (RIPs) are a family of RNA *N*-glycosidases (EC 3.2.2.22) with a high site-specific deadenylation activity towards the large subunits of ribosomal RNA [1–3]. Following the removal of a single adenine, protein synthesis is inhibited as ribosomes are no longer able to bind Elongation Factors. Therefore, when RIPs succeed in penetrating the cytoplasm, protein synthesis is arrested and the cell eventually dies [1]. Besides rRNA, RIPs deadenylate other substrates such as DNA, and many of them also depurinate natural or synthetic polynucleotides [4]. Consequently, the name polynucleotide adenine glycosylase was proposed for these proteins [5].

RIPs are classically subdivided in three groups according to their molecular structure [2,3]. Many RIPs exist as monomers of around 25–30 kDa (type 1 RIPs), highly active towards ribosomes *in vitro*. Nonetheless, their cytotoxicity is limited by their reduced ability to bind to and enter cells. Type 2 RIPs, present in some plants, have an N-terminal RNA *N*-glycosidase domain similar to type 1 RIPs (the A chain) that is joined to a C-terminal carbohydrate-binding domain (the B chain) through a single disulphide bond. These proteins can easily enter target cells and among them there are some of the most potent cytotoxins. Type 3 RIPs are proteins composed by an N-terminal RNA N-glycosidase domain and an extended C-terminal domain, whose function has not been completely

Abbreviations: ABA, abscisic acid; CAPS, 3-(cyclohexylamino)-1-propanesulfonic acid; DTT, dithiothreitol; EDTA, ethylenediaminetetracetic acid; MS, Murashige and Skoog; PAGE, polyacrylamide gel electrophoresis; PVDF, polyvinylidene difluoride; SDS, sodium dodecyl sulfate.

* Corresponding author. Fax: +39 0817753579.
E-mail address: rao@unina.it (R. Rao).

0168-9452/$ – see front matter
doi:10.1016/j.plantsci.2008.01.009

clarified. Type 3 RIPs are synthesised in plants as larger precursors and require proteolytic removal of an internal peptide to be active.

Although different RIPs have been characterized, their biological role in plants is not fully defined [6]. It is believed that these proteins are mainly involved in plant defence [1] as their constitutive expression in transgenic plants increases resistance against different biotic stresses. However, ectopically expressed RIPs (e.g.: PAP, PAPII and trichosanthin) caused an abnormal phenotype in the transgenics, with the highest expression levels resulting in mottled plants with yellow, smaller leaves [7,8]. Such constraint is not universal, as the constitutive expression in plants of some other RIPs is not associated to phenotypic abnormalities [9,10]. Additionally, some mutant RIPs that lack ribonuclease activity proved to be effective as antiviral proteins [11], although their stability and usefulness in different plant species has been questioned by some authors [9,12,13].

A defensive role for RIPs is also supported by the fact that these proteins are present in large quantity in storage organs such as seeds, roots or bulbs [1], because such accumulation should provide an essential advantage against different pathogens. Moreover, RIPs genes are differentially expressed in relation to various conditions and treatments related to stress [1]. For instance, in sugar beet the expression of beetins is induced by viral infection and pathogenesis-related signalling molecule [14]. Among *Phytolacca* plants, it has been reported that the *PIP2* (*Phytolacca insularis* antiviral protein) gene is developmentally regulated and systemically induced in leaves by wounding, jasmonic acid and ABA [15]. However, it has not been determined if the inducible expression of RIPs in plants is able to protect themselves from infecting viruses [15].

Type I RIPs are also of significant interest because of their anti-HIV activity and more generally of their potential for cancer therapy, especially after conjugation with antibodies or other carrier moieties (immuno-toxins) [16]. Although the potential pharmacological properties of RIPs are well-known, further improvements are still needed [17] and to this aim it would be valuable to have suitable heterologous systems to express and purify variant proteins. Unfortunately, owing to their intrinsic cytotoxicity, RIP expression may be problematic in both bacteria and yeasts [18,19]. Despite some known advantages [20], the possibility to use plants as a biosystem for RIP production has been poorly explored [21], probably because high RIP levels are correlated with phytotoxic effects.

The objectives of this work were to characterise the antiviral properties of a type 1 RIP isolated from *Phytolacca heterotepala* (Mexican pokeweed) *in vitro* and *in planta* and to test the feasibility of a rapid transient expression system to produce an active type 1 RIP in tobacco leaves.

2. Materials and methods

2.1. Determination of translation inhibitory activity

Experimental conditions for activity determinations were as follows: reaction mixtures contained, in a final volume of 62.5 μl: 10 mM Tris/HCl buffer (pH 7.4), 100 mM ammonium acetate, 2 mM magnesium acetate, 1 mM ATP, 0.2 mM GTP, 15 mM phosphocreatine, 0.63 μM creatine kinase, 0.05 mM amino acids (minus leucine) (all from Sigma, St. Louis, MO, USA), 89 nCi of L-[^{14}C]-leucine (GE Healthcare, Milano, Italy), scalar concentrations of protein and 25 μl of rabbit reticulocyte lysate. Incubation was at 28 °C for 5 min. The reaction was arrested with 1 ml of 0.1 M KOH, and two drops of H_2O_2 were then added to eliminate possible interferences in β-counter measuring. Proteins were precipitated by adding 1 ml of trichloroacetic acid (20% w/v). Precipitated proteins were collected on glass-fibre discs and the incorporated radioactivity was measured with a β-counter after the addition of 5 ml of Ready Gel scintillation cocktail (Beckman, Milano, Italy) containing 0.7% acetic acid. Data are media (±S.D.) of two experiments carried out in triplicate

2.2. Local lesion assay with the PhRIP I protein

Virus suspension inocula (100 μl) containing 0.5 μg/ml of potato virus X (PVX) and various concentrations of PhRIP I in 50 mM Na–phosphate buffer (pH 7.2) were rubbed on to half leaves of *Nicotiana tabacum* cv. Samsun NN using carborundum (300 mesh) as an abrasive. A PVX inoculum in 50 mM Na–phosphate buffer solution (pH 7.2) was used on each opposite half leaf as a control and rubbed as before. Each treatment was replicated 10 times and randomized on the leaves of the test plants. Lesions were counted 7 days post-inoculation and the percentage inhibition of local lesion formation was calculated using the equation: percent of inhibition = 1 − (number of lesions on RIP + PVX half leaf/number of lesions on PVX control half leaf) × 100 [22]. The statistical significance of the results was evaluated by a *t*-test.

2.3. Construction of plant expression vectors

For transient expression experiments the PhRIP I cDNA was cloned into a high copy number binary vector of the pGreen series [23] using standard molecular techniques [24]. Unless stated otherwise, all enzymes were purchased from Promega (Milano, Italy) and were used according to the manufacturer's recommendations. Firstly, to mutagenise the *Hin*d III site of the pGreen0029 binary vector, this plasmid was cut with the *Hin*d III restriction enzyme, the ends filled-in by the Klenow fragment of DNA I polymerase, and the resulting molecules self-ligated by a T4 DNA ligase treatment, yielding the pG0029M. Subsequently, the 5′- and 3′-regulatory sequences of the 35S RNA CaMV gene were excised from p35S [23] using *Eco*RV and ligated into a similarly digested pG0029M, yielding the pG2935S. The PhRIP I cDNA coding sequence was amplified using the *Pfu* DNA polymerase (Stratagene, Milano, Italy) adding an *Hin*d III restriction site (bold face) to the 5′ end of both primers, 5HIIIRIP (5′-CTC **AAG CTT** ATG CTT GTG GTG ACA ATA TTC) and 3RIPIII (5′-CTC **AAG CTT** TTA AGA ATT CTT CAA ATA GAT). After *Hin*d III digestion, the PCR fragments were gel purified and cloned into a similarly digested pG2935S, yielding the pG2935SRIP vector. The

correctness of the insert was verified by DNA sequencing. The plasmids pG0029M and pG2935SRIP were mobilised along with pSoup [23] into *Agrobacterium tumefaciens* (C5851 strain) cells by electroporation with a Bio-Rad MicroPulser, according to the manufacturer's instructions.

2.4. Plant culture and agroinfiltration

Infiltration with recombinant Agrobacteria (agroinfiltration) was carried out using *Nicotiana tabacum* cv. Samsum NN plants grown in controlled conditions (22 °C and a 16 h light/8 h dark photoperiod). Young fully expanded leaves were vacuum-infiltrated with recombinant *Agrobacterium tumefaciens* cells as described [25]. After infiltration, leaves were incubated in sealed trays on wet paper at 24 °C with a 16 h light/8 h dark photoperiod. Then, the infiltrated leaves were grounded in liquid nitrogen and resuspended into two volumes of ice-cold extraction buffer (200 mM Tris, 5 mM EDTA, 4 mM DTT, pH 8.0). The suspension was cleared twice by centrifugation (20,000 × *g* for 30 min at 4 °C) before immunoassay. For quantification, proteins were resolved on 12% SDS–PAGE and Western blot analysis was carried out using the anti-PD-L4 sera diluted 1:1000 [26]. After washing, bound antibodies were identified using the ECL chemiluminescence-based detection kit (GE Healthcare) according to manufacturer's instructions and signal intensity was quantified using the SigmaScan software v 5.0 (Jandel Scientific, Erkrath, Germany). Quantification of the PhRIP I produced in tobacco leaves was carried out in triplicate, by comparisons to scalar amounts of the purified PhRIP I. As regression analysis indicated a strong linear correlation between the amounts employed and signal intensity ($R^2 > 0.97$), the quantity of PhRIP I in the protein extract was estimated solving the regression equation.

2.5. Characterisation of the PhRIP I from tobacco

The following buffers have been used for the preparation of the recombinant PhRIP I from leaves of *Nicotiana tabacum*: buffer A: 5 mM Na–phosphate, pH 7.2; buffer B: 5 mM Na–phosphate, pH 7.2 containing 0.14 M NaCl; buffer C: 10 mM Na–acetate, pH 4.5; buffer D: 5 mM Na–phosphate, pH 7.2, containing 1 M NaCl; buffer E: 5 mM Na–phosphate, pH 7.2, containing 0.3 M NaCl.

The purification procedure from tobacco leaves was accomplished using a general procedure for basic proteins [27] with some modifications. Briefly, leaves (40 g) were homogenized in 200 ml of buffer B by 20 s bursts at full power using a Waring Blender (Waring Products, Torrington, USA). Subsequently, the protein extract was subject to: (i) acid precipitation (pH 4.0) with acetic acid, in order to use directly soluble acid proteins in the following purification step; (ii) two analytical chromatographies on the system Akta purifier (Amersham Pharmacia, Milan, Italy): (i) loading of the protein sample on the Source™ 15S 4.6/100 PE column (Amersham Pharmacia) equilibrated in buffer C; the column was then washed with buffer A and eluted step-wise with buffer D; (ii) HiLoad 16/60 Sephadex™ 75 prep grade column (GE Healthcare, Milano, Italy), equilibrated and eluted with buffer E. Single eluted fractions from HiLoad 16/60 Sephadex were assayed for polynucleotide–adenosine glycosidase activity [27]. Active fractions with an elution volume corresponding to about 30 kDa were pooled and further subjected Western blotting [27]. Native proteins were separated by SDS–PAGE and submitted to automated sequencing by Edman degradation. After electrophoresis, proteins were transferred to PVDF membrane (Applera, Monza, Italy) by electroblotting with the mini trans-blot cell (Bio-Rad, Milano, Italy), according to the manufacturer's instructions in buffer F (10 mM CAPS, pH 11.0, containing 10% methanol). PVDF membranes were then stained for 1 min with Coomassie Blue R-250, destained with the washing solution (50% methanol), dried and directly analysed by Edman degradation on a Procise Model 491C sequencer (Applied Biosystems, Foster City, USA) as reported [28].

2.6. Analysis of the PhRIP I antiviral activity in transgenic tobacco

The tobacco genetic transformation using the binary vector pGIPRIP and the molecular characterization of the transformants (named PGIPRIP) were as described [26]. Briefly, in the pGIPRIP plasmid, the cDNA encoding the PhRIP I was cloned under the control of the wound-inducible PGIP promoter from bean [29]. Plants of four independent transgenic lines (named PGIPRIP 1, 2, 18 and 37) were used for the analysis of the PhRIP I antiviral activity. Seeds were surface sterilized firstly with 70% ethanol and then with 3% NaOCl containing 0.1% Tween 20 as surfactant. The seeds were rinsed five times with sterile water and germinated on MS medium supplemented with 30 g of sucrose and 50 mg of kanamycin per liter. After 14 days seedlings were transferred to soil and grown in a growth chamber (22 °C, 16 h light/8 h dark photoperiod) for 4 weeks. For the induction of the wound-inducible promoter, two leaves of 10 tobacco plants per line were wounded with a haemostat perpendicularly to the main vain. Ten unwounded plants for each line were also used as uninduced control. Four days following PhRIP I induction, two leaves of each of the 10 plants were infected with PVX as described before. The number of lesions on infected leaves was determined 7 days after infection and the significance of the data was assessed by Duncan grouping analysis. The percentage of inhibition of lesion formation in the wounded transgenic lines refers to the number of lesions of the wounded untransformed plants.

3. Results

3.1. Translational inhibitory activity of the PhRIP I

The inhibitory effect of the PhRIP I purified from leaves of the *Phytolacca heterotepala* (Fig. 1a and b) on translation was estimated by a cell-free system (rabbit reticulocyte lysate). As shown in Fig. 1c, the incorporation of ^{14}C-leucine in neosynthesized proteins gradually decreased as the concentration

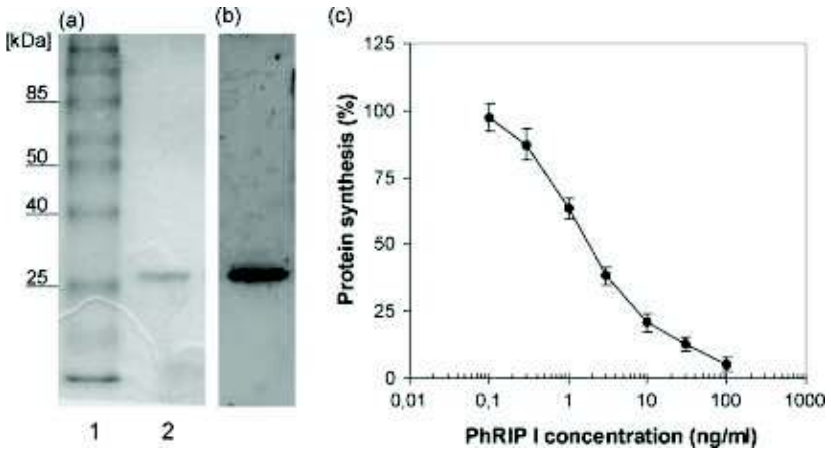

Fig. 1. Purification and translational inhibitory activity of PhRIP I. (a) Coomassie blue staining of the purified PhRIP I resolved by SDS–PAGE. Lanes 1 and 2 were loaded with molecular mass marker (Invitrogen) and 400 ng of PhRIP I, respectively; (b) Western blot analysis of 4 ng of purified PhRIP I using the PD-L4 antibody; (c) dose-dependent inhibitory activity curve of the PhRIP I on rabbit reticulocyte lysate. Protein synthesis is expressed as percentage of the control mean value. The error bars indicate the standard deviation for the average of two independent experiments each performed in triplicate.

of PhRIP I increased, indicating that the RIP inhibits protein synthesis *in vitro*. The concentration of the protein causing 50% inhibition (IC_{50}) in the *in vitro* translation system was 0.065 nM (1.96 ng/ml), calculated by linear-regression analysis. Protein synthesis was completely inhibited by PhRIP I at concentration of about 100 ng/ml.

3.2. *In vitro antiviral activity of PhRIP I*

A local lesion assay was performed to establish the usefulness of the PhRIP I in suppressing PVX infection of tobacco plants. *Nicotiana tabacum* cv. Samsun NN was used as host plant because the *N* gene controls the hypersensitive reaction, and plants respond to PVX infection by forming necrotic lesions at the site of infection. Different concentrations of RIP were tested and if the PhRIP I prevents PVX infection, the formation of necrotic lesions is inhibited (Fig. 2). Table 1 shows the mean number of lesions on half leaves inoculated with the PhRIP I and PVX and on opposite control half leaves inoculated with PVX alone. The data indicated that the PhRIP I has a significant antiviral activity at the different concentrations employed.

3.3. *The PhRIP I produced in tobacco by transient expression maintains its antiviral activity*

To demonstrate that tobacco plants can produce an antiviral PhRIP I protein, we used an assay based on the infiltration of leaves with *Agrobacterium tumefaciens*. This also allowed us to verify the potential of this transient expression system for RIP production, as plants have been proposed as alternative biological system to yield proteins of possible pharmaceutical interest [20]. To this aim, we cloned the PhRIP I cDNA under the control of the 35S RNA CaMV constitutive promoter in a derivative of the high-copy number vector pG0029 [23], yielding the pG2935SRIP. As control we used the empty vector (Fig. 3). Following agroinfiltration, total soluble proteins were isolated after 4 days of incubation. The presence of the PhRIP I

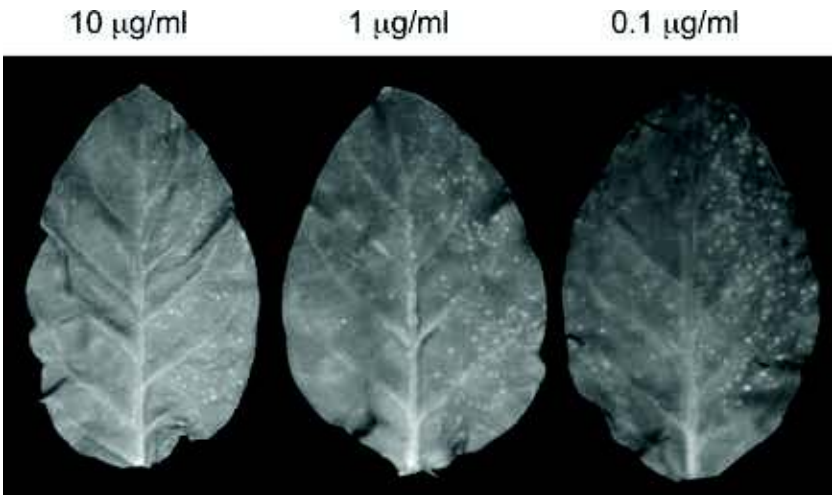

Fig. 2. Inhibition by PhRIP I of local lesion formation by PVX on *N. tabacum* cv. Samsun NN leaves. The left half of the leaf was treated with PVX and PhRIP I protein at the concentration indicated on the top whereas the right half was treated with PVX alone.

Table 1
Effect of PhRIP I on PVX infection to tobacco leaves

[PhRIP I] (μg/ml)	Mean number of lesions per half leaf		Inhibition (%)	Probability level
	PVX	PVX + PhRIP I		
10.0	117.3	1.7	99	<0.001
1.0	73.1	2.9	96	<0.001
0.1	63.8	9.8	76	<0.001

Individual values for lesion numbers are the mean of 10 replicates. The concentration of the PVX inoculum was 0.5 μg/ml.

in the protein extract was analysed by a Western blot assay (Fig. 4). The analysis revealed other immunoreactive products, present also in the protein extract from leaves infiltrated with the agrobacterium carrying the empty vector. For that reason, we used an analytical procedure to prepare and sequence the N-terminus of the band of the expected molecular weight. Several peaks absorbing at 280 nm (numbered from 1 to 6) were obtained from the last analytical step (Fig. 5) but only peak 2 had polynucleotide–adenosine glycosidase activity. A Western blot assay indicated that this fraction included at least two bands, of approximately 30 kDa (Fig. 6), that are detected by the antiserum raised against PD-L4, a type 1 Ribosome-Inactivating Protein isolated from *Phytolacca dioica* leaves [30]. The bands, transferred to a PVDF membrane, were subjected to Edman degradation. Band 1, with MW of about 30 kDa (Fig. 6), showed the N-terminal amino acid sequence (VNTII YNVGS TTISK) identical to the corresponding sequence of the mature native PhRIP I. On the contrary, for the sequence of the band 2 (obtained with a lower yield) a significant correspondence to any of the currently known Ribosome-Inactivating Proteins was not found. The data demonstrated that tobacco leaves infiltrated with recombinant Agrobacteria produced a correctly processed PhRIP I. An estimation of its quantity, carried out by quantifying the intensity of the RIP specific immuno-signal in comparison with

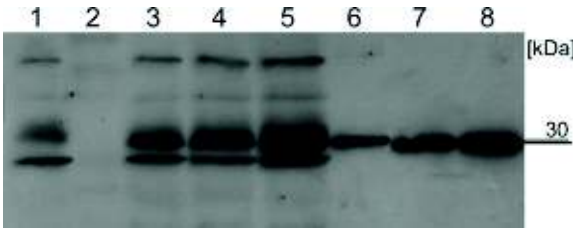

Fig. 4. Western blot analysis of the accumulation of the PhRIP I protein transiently expressed in tobacco. Different amounts of a crude protein extract (CPE) were subjected to SDS–PAGE along with different amounts of purified PhRIP I. (1) CPE (60 μg) from leaves agroinfiltrated with the empty vector pG0029M; (2) NN (60 μg); (3, 4 and 5) CPE (30, 45 and 60 μg) from leaves agroinfiltrated with the pG2935SRIP; (6, 7 and 8) PhRIP I (1.9, 3.8 and 7.6 ng) purified from *Phytolacca heterotepala*.

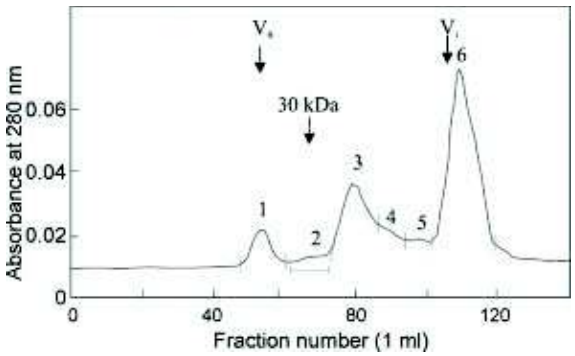

Fig. 5. Chromatographic elution profile from the gel-filtration on the HiLoad 16/60 Sephadex™ 75 column of the final purification step of PhRIP I from tobacco leaves. Only peak 2 (bar; MW ≅ 30 kDa) showed polynucleotide-adenosine glycosidase activity.

known amount of the purified PhRIP I (Fig. 4), indicated the presence of 1.2 ± 0.1 μg per mg of total soluble proteins. Such quantification was needed to perform a local lesion inhibition assay against PVX, to test if the PhRIP I produced in tobacco retains its antiviral activity. In this assay, we used an inoculum

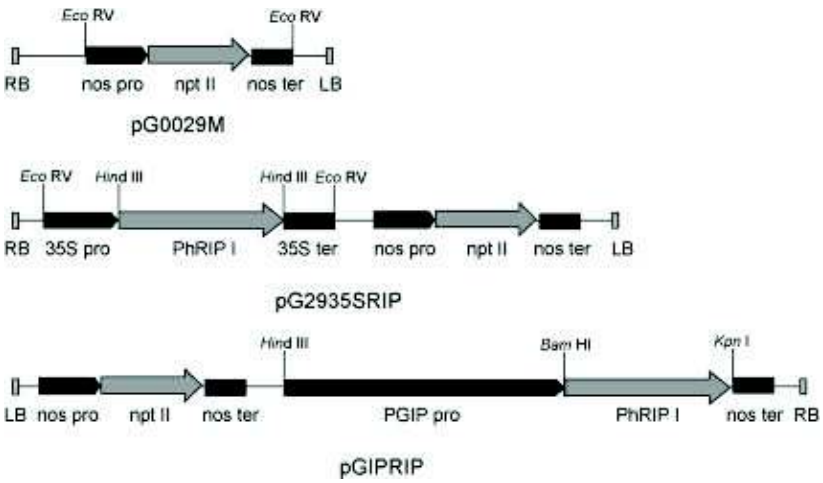

Fig. 3. Schematic representation of the T-DNA region of the binary vectors employed, showing the position of the restriction sites used for cloning. Grey arrows represent coding sequences. black areas *cis*-controlling elements. RB: T-DNA right border sequence; nos pro: *nopaline synthase* gene promoter; npt II: *neomycin phosphotransferase* gene; nos ter: poly(A) addition sequence of the *nos* gene; LB: T-DNA left border sequence; 35S: CaMV *35S RNA* gene promoter; 35S ter: poly(A) addition sequence of the CaMV *35S RNA* gene; PGIP Pro: bean *polygalacturonase inhibitor* I gene promoter; PhRIP I: *Phytolacca heretotepala RIP I* cDNA sequence.

Fig. 6. Western blot analysis of peak 2, using the polyclonal antiserum prepared against PD-L4. Lane 1, PD-L4 (0.3 μg); lanes 2 and 3, peak 2 (0.8 and 1.6 μg, respectively).

(0.5 μg/ml of PVX) with 0.18 μg/ml of PhRIP I in the CPE. At this concentration, the purified protein from *P. heterotepala* gave a 79% inhibition of the lesion formation (the mean number of lesion was 92.0 for the PVX alone and 19.2 for the PVX with the PhRIP I). As control for the CPE with the recombinant PhRIP I, we used a PVX inoculum with an equivalent amount of total proteins in the CPE extracted from tobacco leaves agroinfiltrated with the empty vector. The percentage of inhibition of lesion formation was 93% (Table 2). In a parallel experiment, we also calculated the inhibition of lesion formation of the recombinant PhRIP I in the CPE compared to the buffer, which was 99% (Table 2). Overall, the data indicated that the PhRIP I enzyme maintains its antiviral activity when expressed in tobacco.

3.4. Antiviral activity of the PhRIP I in transgenic tobacco

To test if PhRIP I can increase virus resistance *in planta*, the possible protective effect of the protein was analysed in infection experiments with PVX with transgenic tobacco lines that express the PhRIP I under the control of the wound-inducible PGIP promoter (Fig. 3) [29]. After PVX inoculation, the number of necrotic lesions was determined on each infected leaf in both induced and untreated plants of four transgenic lines and of the Samsun NN untransformed control (Table 3). As expected, differences between the transgenic lines and the wild-type tobacco were not observed when the expression of the PhRIP I was not induced in the transgenic lines. Similarly, statistical differences in the number of lesions were not detected between wounded and un-wounded untransformed control plants, indicating that in our conditions the mechanical damage of the plants did not significantly alter tobacco resistance to PVX. As also shown in Table 3, the number of lesions in the induced transgenic lines was significantly lower than that in the wild-type. Additionally, some differences were observed among the transgenic lines. Although we could not observe a complete protection, the reduction of viral symptoms, which ranged from 56% (for the PGIRIP 1 line) to 81% (for the PGIPRIP 2), demonstrated that the controlled expression of the PhRIP I in tobacco (Fig. 7) confers a protective effect against PVX infection.

Table 3
Duncan grouping analysis ($P < 0.05$) of the results of a bioassay of transgenic PGIPRIP lines and the control tobacco (NN) infected with PVX

Line	Induction[a]	Mean number of lesions	Duncan group
NN	–	82.4	a
PGIPRIP 1	–	98.1	a
PGIPRIP 2	–	75.3	a
PGIPRIP 18	–	88.7	a
PGIPRIP 37	–	93.4	a
NN	+	79.5	a
PGIPRIP 1	+	34.9	b
PGIPRIP 2	+	14.9	c
PGIPRIP 18	+	30.9	bc
PGIPRIP 37	+	18.2	bc

For each line 10 unwounded (−) and 10 wounded (+) plants were infected with PVX (0.5 μg/ml) and the number of lesions was counted after 7 days.
[a] The induction of the wound-inducible promoter controlling the PhRIP I expression is indicated as absent (−) or present (+).

4. Discussion

Although the biochemical properties of the RIPs are well characterised, their biological function in plants is not fully understood [6]. Several studies have reported that some type 1 RIPs show antifungal and/or antiviral activities when constitutively expressed in plants and this is probably one of the strongest arguments to support the view that RIPs are involved in plant defence against biotic stress [1]. The evidence available suggests that RIP induction in plants could play a role in increasing protection against pathogens, but it is not completely clear weather or not RIPs are elements of the systemic acquired resistance [15]. Furthermore, even if RIPs can be used to increase virus resistance, a problem to be solved is the possible

Table 2
Effect of the PhRIP I produced in tobacco on PVX infection to tobacco leaves

Mean number of lesions per half leaf			Inhibition (%)	Probability level
PVX + control		PVX + rPhRIP I in CPE		
CPE	77.4	5.6	93	<0.001
Buffer	102.7	1.2	99	<0.001

Individual values for lesion numbers are the mean of 10 replicates. The concentration of the PVX inoculum was 0.5 μg/ml. The concentration of the recombinant PhRIP I produced in tobacco (rPhRIP I) was 0.18 μg/ml. Its antiviral activity was compared to two controls, CPE (Crude Protein Extract from agroinfiltrated tobacco leaves) and the buffer (50 mM Na–phosphate buffer solution, pH 7.2).

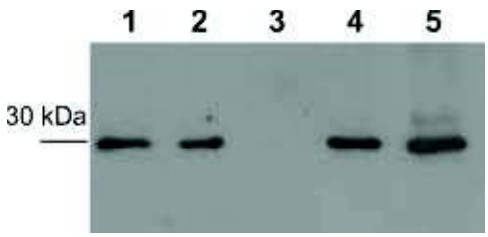

Fig. 7. Western blot analysis of the transgenic PGIPRIP lines after wounding. Protein extracts were prepared from wounded leaf areas of transgenic plants and from the untransformed *Nicotiana tabacum* 'Samsun' NN 4 days following the treatment. Proteins (40 μg) were run in a 12% SDS–PAGE. (1) PGIPRIP 1; (2) PGIPRIP 2; (3) NN; (4) PGIPRIP 18; (5) PGIPRIP 37.

presence of phytotoxic effects due to constitutive expression of these enzymes. For these reasons, one of our aims was to show that the inducible expression of a RIP can increase virus resistance in plants. Our study focused on the PhRIP I, a type I RIP that was previously shown to increase fungal resistance in tobacco [26]. To quantify the activity of the native protein, we performed an inhibition assay of the translation process in a cell-free system. The IC_{50} of the PhRIP I was significantly higher than many RIPs, yet comparable to that of similar enzymes purified from other Phytolacca species [31,32], suggesting that our protein may exert its effects when also present in small amount. Hence, the data make reasonable the use of an inducible promoter for plant expression, as previous studies showed that in transgenic tobacco expressing RIPs under a strong constitutive promoter, the enhanced virus resistance can occur at relatively low expression levels [8,33].

We first demonstrated that the PhRIP I has antiviral activity *in vitro* against PVX and then we verified that tobacco plants can produce a recombinant protein that retains this activity. As the potential medical and agricultural applications of RIPs continue to increase, we also wanted to test the agroinfiltration technique as a means of a rapid plant-based production system. The characterization of PhRIP I from tobacco leaves not only provided the evidence that the protein maintains its antiviral activity when ectopically expressed in tobacco but also indicated that the protein is correctly synthesized and processed by host cells, since the signal peptide was precisely cleaved from the preprotein. N-terminal sequence of the native PhRIP I indicated that the first 22 leading amino acids coded by its cDNA sequence are removed [26]. Thus, *P. heterotepala* and tobacco may possess similar mechanisms for the maturation of this secretory sequence, even though database search does not retrieve any large similarity between the PhRIP I signal peptide and the tobacco sequences currently available. It has been previously reported that, using a transient expression system based on a plant RNA viral vector, the α-trichosanthin (a RIP that also increases resistance against RNA viruses in plants [7]) is produced in tobacco in 2-weeks time [34]. Since tissue containing the recombinant RIPs can be harvested 4 days after agroinfiltration, our data proved the suitability of this method for a very rapid production of RIP enzymes in plants. However, if the overall quantity is a primary concern, the yield obtained also implied that larger production of cytotoxic RIPs could be achievable through the use of stable transgenic lines in which, for instance, the coding sequence is under the control of a promoter that could be chemically inducible.

To determine if transgenic lines expressing the PhRIP I are more resistant to virus infection, plants of four different independently transformed *N. tabacum* lines were screened for resistance to PVX. Even if we did not assayed the N-glycosidase activity in the transgenic plants, bioassays demonstrated that upon the induction of the promoter controlling the expression of the PhRIP I, the PGIPRIP lines developed a statistically significant lower number of necrotic lesions. In the transformed lines the number of lesions was reduced up to 81% compared to untransformed plants. Interestingly, a similar reduction in the number of lesions was reported for the highly expressing PAP, PAPII and IRIP tobacco transformants, in which the RIP coding sequence was under the control of the 35S RNA constitutive promoter [8,13,33]. It can be concluded that the controlled expression of the PhRIP I exerts an *in planta* antiviral activity comparable to that of other constitutively expressed RIPs. On the other hand, the fact that without the induction of the transgene, we did not detect differences in the resistance to PVX suggests that the PGIP promoter is tightly regulated in our lines and it is not activated by viral infection in tobacco, as expected [29].

Considering that the inducible expression of the PhRIP I can also increase the resistance against different phytopatogenic fungi [26], this work indicates that the constitutive expression of RIPs is not necessary to exploit their multiple protective effects in plants. Although it is not yet clear if stress-induction is a universal phenomenon among plant RIPs [1], the inducible resistance against different biotic stresses supports the proposition that defence is an important component of RIP biology. Furthermore, our data are also significant because biotechnological strategies that can assure low level of RIPs to increase pathogen resistance in plants should be favoured, as different vegetables consumed as row food or feed display only low RIP activities [35]. The improvement of inducible plant expression systems for field applications is an interesting perspective to assess in the future the biotechnological usefulness of RIPs in an agricultural context.

Acknowledgments

The PVX isolate was a generous gift from Dr K. Verhoeven (Plant Protection Service, Wageningen, NL). We would also like to thank Antonio Peluso for the virus propagation and Adele Cataldo for technical assistance.

References

[1] K. Nielsen, R.S. Boston, Ribosome-Inactivating Proteins: a plant perspective, Annu. Rev. Plant Physiol. Plant Mol. Biol. 52 (2001) 785–816.
[2] W.J. Peumans, Q. Hao, E.J.M. Van Damme, Ribosome-Inactivating Proteins from plants: more than RNA *N*-glycosidases? FASEB. J. 15 (2001) 1493–1506.
[3] E.J.M. Van Damme, Q. Hao, Y. Chen, A. Barre, F. Vandenbussche, S. Desmyter, P. Rouge, W.J. Peumans, Ribosome-Inactivating Proteins: a family of plant proteins that do more than inactivate ribosomes, Crit. Rev. Plant Sci. 20 (2001) 395–465.
[4] L. Barbieri, P. Valbonesi, E. Bonora, P. Gorini, A. Bolognesi, F. Stirpe, Polynucleotide: adenosine glycosidase activity of Ribosome-Inactivating Proteins: effect on DNA, RNA and poly(A), Nucleic Acids Res. 25 (1997) 518–522.
[5] L. Barbieri, P. Valbonesi, M. Bondioli, M.L. Alvarez, P. Dal Monte, M.P. Landini, F. Stirpe, Adenine glycosylase activity in mammalian tissues: an equivalent of Ribosome-Inactivating Proteins, FEBS Lett. 505 (2001) 196–197.
[6] S.W. Park, R. Vepachedu, N. Sharma, J.M. Vivanco, Ribosome-Inactivating Proteins in plant biology, Planta 219 (2004) 1093–1096.
[7] Y.H. Lam, Y.S. Wong, B. Wang, R.N.S. Wong, H.W. Yeung, P.C. Shah, Use of trichosanthin to reduce infection by Turnip Mosaic Virus, Plant Sc. 114 (1996) 111–117.
[8] J.K. Lodge, W.K. Kaniewski, N.E. Tumer, Broad-spectrum virus-resistance in transgenic plants expressing Pokeweed Antiviral Protein, Proc. Natl. Acad. Sci. U.S.A. 90 (1993) 7089–7093.

[9] S. Desmyter, F. Vandenbussche, Q. Hao, P. Proost, W.J. Peumans, E.J. Van Damme, Type-1 Ribosome-Inactivating Protein from iris bulbs: a useful agronomic tool to engineer virus resistance? Plant Mol. Biol. 51 (2003) 567–576.

[10] K.H. Oldach, D. Becker, H. Lorz, Heterologous expression of genes mediating enhanced fungal resistance in transgenic wheat, Mol. Plant Microbe Interact. 14 (2001) 832–838.

[11] N.E. Tumer, D.J. Hwang, M. Bonness, C-terminal deletion mutant of pokeweed antiviral protein inhibits viral infection but does not depurinate host ribosomes, Proc. Natl. Acad. Sci. U.S.A. 94 (1997) 3866–3871.

[12] W.D. Dai, S. Bonos, Z. Guo, W.A. Meyer, P.R. Day, F.C. Belanger, Expression of pokeweed antiviral proteins in creeping bentgrass, Plant Cell Rep. 21 (2003) 497–502.

[13] F. Vandenbussche, W.J. Peumans, S. Desmyter, P. Proost, M. Ciani, E.J.M. Van Damme, The type-1 and type-2 Ribosome-Inactivating Proteins from Iris confer transgenic tobacco plants local but not systemic protection against viruses, Planta 220 (2004) 211–221.

[14] R. Iglesias, Y. Perez, C. de Torre, J.M. Ferreras, P. Antolin, P. Jimenez, M.A. Rojo, E. Mendez, T. Girbes, Molecular characterization and systemic induction of single-chain Ribosome-Inactivating Proteins (RIPs) in sugar beet (*Beta vulgaris*) leaves, J. Exp. Bot. 56 (2005) 1675–1684.

[15] S.K. Song, Y. Choi, Y.H. Moon, S.G. Kim, Y.D. Choi, J.S. Lee, Systemic induction of a *Phytolacca insularis* antiviral protein gene by mechanical wounding, jasmonic acid, and abscisic acid, Plant Mol. Biol. 43 (2000) 439–450.

[16] A. Bolognesi, L. Polito, Immunotoxins and other conjugates: pre-clinical studies, Mini Rev. Med. Chem. 4 (2004) 563–583.

[17] F. Stirpe, M.G. Battelli, Ribosome-Inactivating Proteins: progress and problems, Cell Mol. Life Sci. 63 (2006) 1850–1866.

[18] R. Vepachedu, S.W. Park, N. Sharma, J.A. Vivanco, Bacterial expression and enzymatic activity analysis of ME1, a Ribosome Inactivating Protein from *Mirabilis expansa*, Prot. Express. Purif. 40 (2005) 142–151.

[19] Y. Hur, D.J. Hwang, O. Zoubenko, C. Coetzer, F.M. Uckun, N.E. Tumer, Isolation and characterization of Pokeweed Antiviral Protein mutations in *Saccharomyces cerevisiae*—identification of residues important for toxicity, Proc. Natl. Acad. Sci. U.S.A. 92 (1995) 8448–8452.

[20] G. Giddings, G. Allison, D. Brooks, A. Carter, Transgenic plants as factories for biopharmaceuticals, Nat. Biotechnol. 18 (2000) 1151–1155.

[21] R. Krishnan, K.A. McDonald, A.M. Dandekar, A.P. Jackman, B. Falk, Expression of recombinant trichosanthin, a Ribosome-Inactivating Protein, in transgenic tobacco, J. Biotechnol. 97 (2002) 69–88.

[22] S. Taylor, A. Massiah, G. Lomonossoff, L.M. Roberts, J.M. Lord, M. Hartley, Correlation between the activities of 5 Ribosome-Inactivating Proteins in depurination of tobacco ribosomes and inhibition of Tobacco Mosaic-Virus infection, Plant J. 5 (1994) 827–835.

[23] R.P. Hellens, E.A. Edwards, N.R. Leyland, S. Bean, P.M. Mullineaux, pGreen: a versatile and flexible binary Ti vector for Agrobacterium-mediated plant transformation, Plant Mol. Biol. 42 (2000) 819–832.

[24] J. Sambrook, D.W. Russell, Molecular Cloning: A Laboratory Manual, Cold Spring Harbor Laboratory Press, Cold Spring Harbor, NY, 2001.

[25] J. Kapila, R. DeRycke, M. VanMontagu, G. Angenon, An Agrobacterium-mediated transient gene expression system for intact leaves, Plant Sci. 122 (1997) 101–108.

[26] G. Corrado, P.D. Bovi, R. Ciliento, L. Gaudio, A. Di Maro, S. Aceto, M. Lorito, R. Rao, Inducible expression of a *Phytolacca heterotepala* Ribosome-Inactivating Protein leads to enhanced resistance against major fungal pathogens in tobacco, Phytopatholgy 95 (2005) 206–215.

[27] A. Di Maro, A. Chambery, A. Daniele, P. Casoria, A. Parente, Isolation and characterization of heterotepalins, type 1 Ribosome-Inactivating Proteins from *Phytolacca heterotepala* leaves, Phytochemistry 68 (2007) 767–776.

[28] A. Parente, P. Deluca, A. Bolognesi, L. Barbieri, M.G. Battelli, A. Abbondanza, M.J.W. Sande, G.S. Gigliano, P.L. Tazzari, F. Stirpe, Purification and partial characterization of single-chain Ribosome-Inactivating Proteins from the seeds of *Phytolacca dioica* L., Biochem. Biophys. Acta 1216 (1993) 43–49.

[29] A. Devoto, F. Leckie, E. Lupotto, F. Cervone, G. De Lorenzo, The promoter of a gene encoding a polygalacturonase-inhibiting protein of *Phaseolus vulgaris* L. is activated by wounding but not by elicitors or pathogen infection, Planta 205 (1998) 165–174.

[30] A. Di Maro, P. Valbonesi, A. Bolognesi, F. Stirpe, P. De Luca, G.S. Gigliano, L. Gaudio, P.D. Bovi, P. Ferranti, A. Malorni, A. Parente, Isolation and characterization of four type-1 Ribosome-Inactivating Proteins, with polynucleotide:adenosine glycosidase activity, from leaves of *Phytolacca dioica* L., Planta 208 (1999) 125–131.

[31] S. Narayanan, K. Surendranath, N. Bora, A. Surolia, A.A. Karande, Ribosorne inactivating proteins and apoptosis, FEBS Lett. 579 (2005) 1324–1331.

[32] F. Stirpe, L. Barbieri, M.G. Battelli, M. Soria, D.A. Lappi, Ribosome-Inactivating Proteins from plants—Present status and future prospects, Bio-Technology 10 (1992) 405–412.

[33] P.G. Wang, O. Zoubenko, N.E. Tumer, Reduced toxicity and broad spectrum resistance to viral and fungal infection in transgenic plants expressing Pokeweed Antiviral Protein II, Plant Mol. Biol. 38 (1998) 957–964.

[34] M.H. Kumagai, T.H. Turpen, N. Weinzettl, G. Dellacioppa, A.M. Turpen, J. Donson, M.E. Hilf, G.L. Grantham, W.O. Dawson, T.P. Chow, M. Piatak, L.K. Grill, High-level expression of biologically-active Alpha-Trichosanthin in transfected plants by an RNA viral vector, Proc. Natl. Acad. Sci. U.S.A. 90 (1993) 427–430.

[35] L. Barbieri, L. Polito, A. Bolognesi, M. Ciani, E. Pelosi, V. Farini, A.K. Jha, N. Sharma, J.M. Vivanco, A. Chambery, A. Parente, F. Stirpe, Ribosome-Inactivating Proteins in edible plants and purification and characterization of a new Ribosome-Inactivating Protein from *Cucurbita moschata*, Biochem. Biophys. Acta-Gen. Subj. 1760 (2006) 783–792.